SAIL	AREA (SQ FT)	LUFF	LEACH	FOOT	[illegible]	[illegible]
MAINSAIL	185	32'-0	33'-3	10'-0	7	SLAT BATTENS TOP & BOTTOM = 2'-0" M.D. = 2'-2" HEADBOARD = 6 (MEASURED ACROSS FULL WTH)
Nº 1 GENOA	356	37'-6"	36'-3"	20'-2	5	L.P. = 19'-0 MIN CLOTH WTS UK 4.8 OZS (BRITEX) U.S. 3.8 OZS (AMSP)
Nº 2 GENOA	320	35'-6"	34'-0"	19'-3"	6	TO RULES – MAX AREA = 328 SQ FT MIN LUFF = 35 FT MAX LUFF 36 FT
STAYSAIL	232	32'-0"	28'-3"	16'-6"	7	TO RULES:- MAX AREA = 240 SQ FT MIN LUFF = 31 FT MAX LUFF = 33 FT
STORM JIB	85	22'-0"	15'-6"	11'-6"	7	TO RULES:- MAX AREA = 90 SQ FT AFTER 1/1/78 MAX AREA 69 SQ FT
SPINNAKER	875	37'-6"	37'-6"	22'-10"	1½	TO RULES:- LUFF & LEACH = 37.5 FT (37'-6") WIDTH = 22.8 FT (22'-10")
STARCUT	80%					

PRINCIPAL DIMENSIONS

I = 37'-2", J = 12'-8", P = 32'-0", E = 10'-0",

* GENERAL NOTES (ALL COMPLY WITH CONESSA 32 CLASS RULES)

1. ALL HEADSAILS MAY ONLY BE USED WITH LUFF ATTACHED TO FORESTAY, EITHER BY HANKS OR IN A GROOVE.
2. MAINSAIL, SPINNAKER, Nº 1 & Nº 2 GENOAS MUST HAVE INSIGNIAS ON BOTH SIDES OF SAIL. INSIGNIAS TO BE EITHER : I.O.R. OR C.O. OR R.Y.A.

SIZE OF LETTERS & NUMBERS TO COMPLY WITH I.Y.R.U. RULE 25.1 (e)

EG.- HEIGHT : 1.0 FT.
WITH : 0.7 FT. (8.4") ⊕
THICKNESS. 0.15 FT. (1.8")

⊕ EXCLUDING NUMBER 1 & LETTER I.

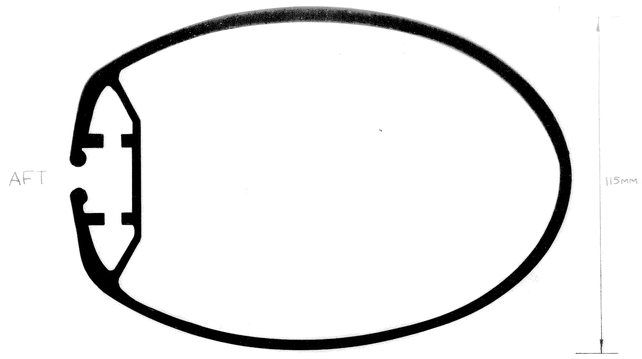

MAINMAST SECTION : KEMPS KS, 170/115.

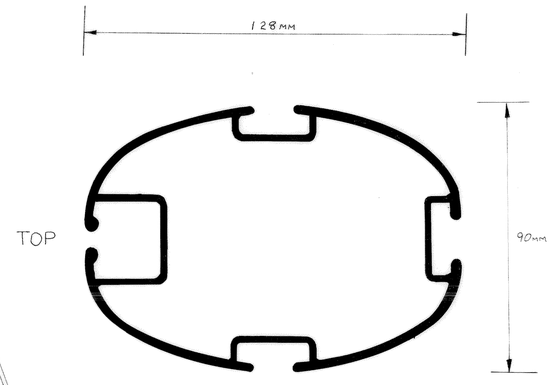

MAIN BOOM SECTION : KEMPS 128/90
SCALE FULL SIZE.

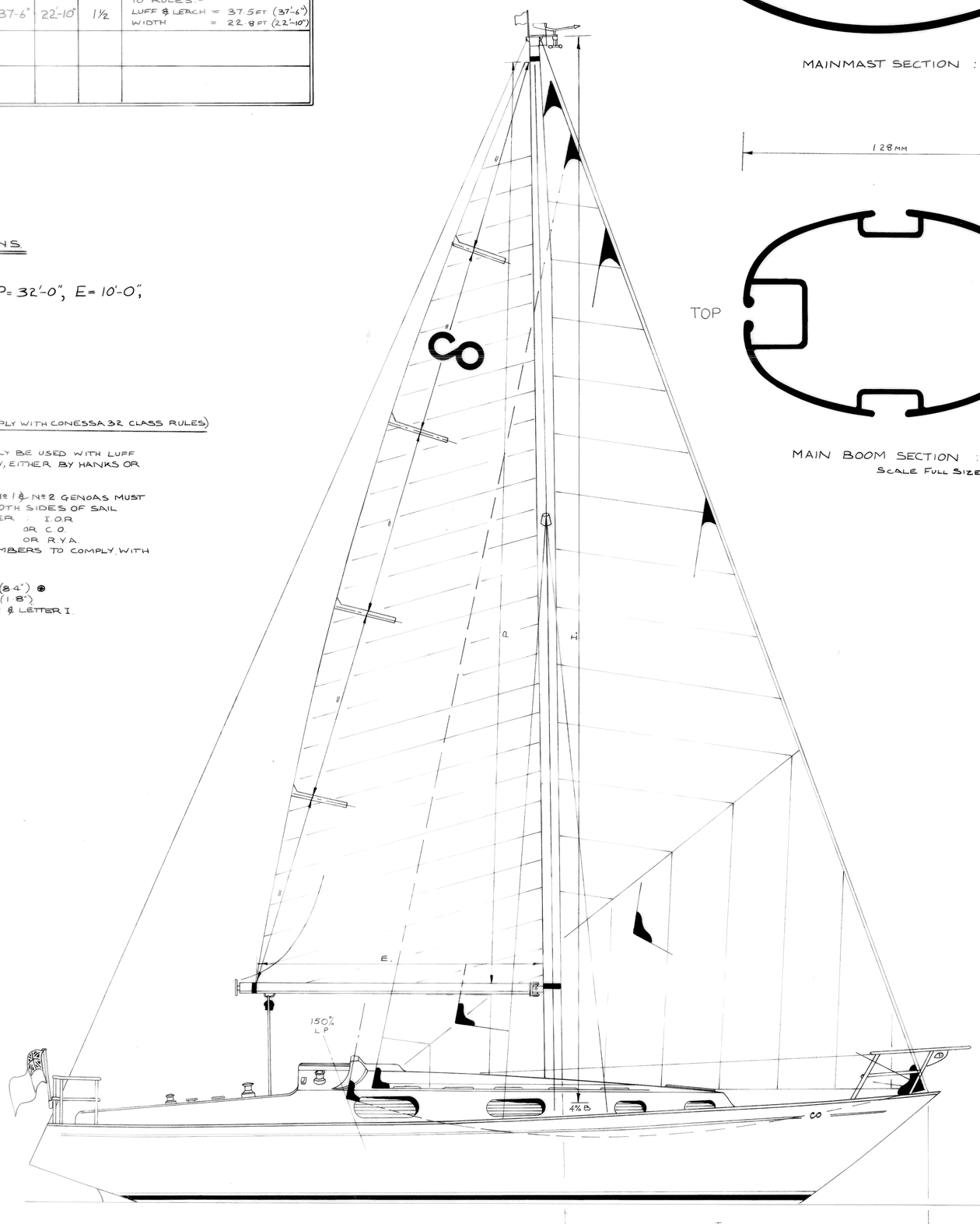

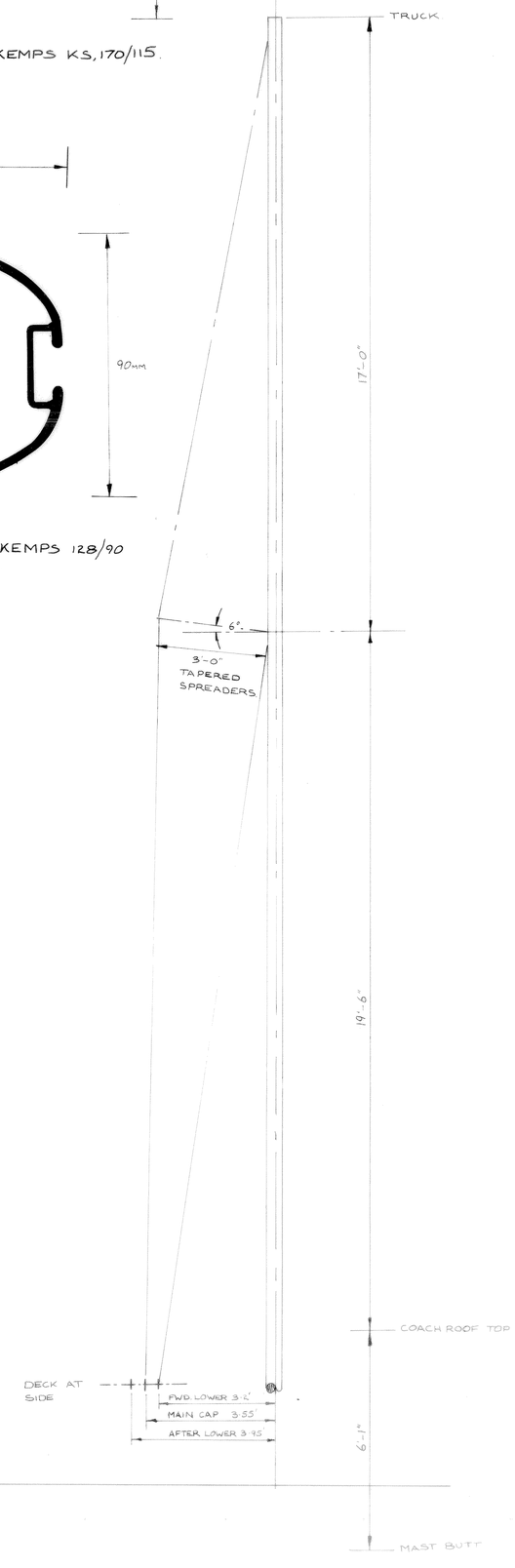

CONTESSA YACHTS LTD
CONTESSA 32

CO 32
Nº 8
N 69